2|1

Manufacturers
Data
Base

MC0022

Roofing systems

Roofing systems

Department of Health
and Social Security
January 1973

Contents

1

		page
INTRODUCTION	General introduction	3
	Component introduction	4
COMPONENT DESCRIPTION	Description	5
	Dimensional discipline	7
	Performance standards	11
	Accessories	
USE	Use selection	15
	Detail use	16
	Schedules	-
SELECTION	Coding conventions	19
	Coded range	20-21
	Code index	-

Digitized by the Internet Archive
in 2025 with funding from
UCL Library Special Collections

https://archive.org/details/ucl_mc0022

2

Introduction

3 General Introduction

This 1973 Edition of the MDB incorporates some changes suggested by the users.

Feedback from the users can materially assist the Department's monitoring functions. Forms for this purpose will be available.

Technical Document

The Technical Document for each component (see list on back cover) gives component descriptions, dimensional ranges and coding, and advises on selection and use.

Product Specification

The Product Specifications will be supplied by each of the selected manufacturers. A folder will be supplied for each range of components described in the Technical Documents. Manufacturers will send approved MDB information direct to the users. This will include descriptions of performance, details of junctions with adjoining components, drawings or photographs and the fixing and maintenance services offered, sufficient for a user to make a choice of manufacturers in his area. This detailed information should be checked again at tender stage.

Price List

The Price List for each component range gives prices obtained from each manufacturer, the terms and conditions under which these prices have been obtained and the method of measurement. This is a confidential document and will be supplied only to users of the components.

Use and Index

The Use and Index is the key document giving information about the other documents and the use of the system. Part of the Use and Index will be a list of the name, address, telephone number and customer contacts of each of the selected manufacturers.

Service Document

The Service Document is primarily intended for the Main Contractor and gives information about the service he will get from and be required to provide to the selected manufacturer.

Colour Coding

Technical Documents have BLUE covers.

Product Specifications have YELLOW covers.

Price Lists have RED covers.

Component Introduction

4

This document describes
ROOFING SYSTEMS
generally suitable for flat roofs in Health and Welfare buildings.

In the following sections the
ROOFING SYSTEMS
are described in detail.

In Use and Index it is stressed that successful use of co-ordinated components depends on:-

1 Orderly selection to ensure functional compatibility.

2 Acceptance of dimensional conventions for the incorporation of components in both design and production stages.

3 Definition of junctions within these dimensional conventions so that standard co-ordinated components can always be used.

MDB components have been selected on this basis and the MDB. range offers functionally suitable components which are compatible with adjoining components.

Data given in this document is applicable to all selected components in this category. It is supplemented by manufacturers details given in their product specifications.

The coding used is part of a data co-ordination system based on the CI/SfB system.

5

Component Description

6 Roofing system description

A complete roofing system comprises;

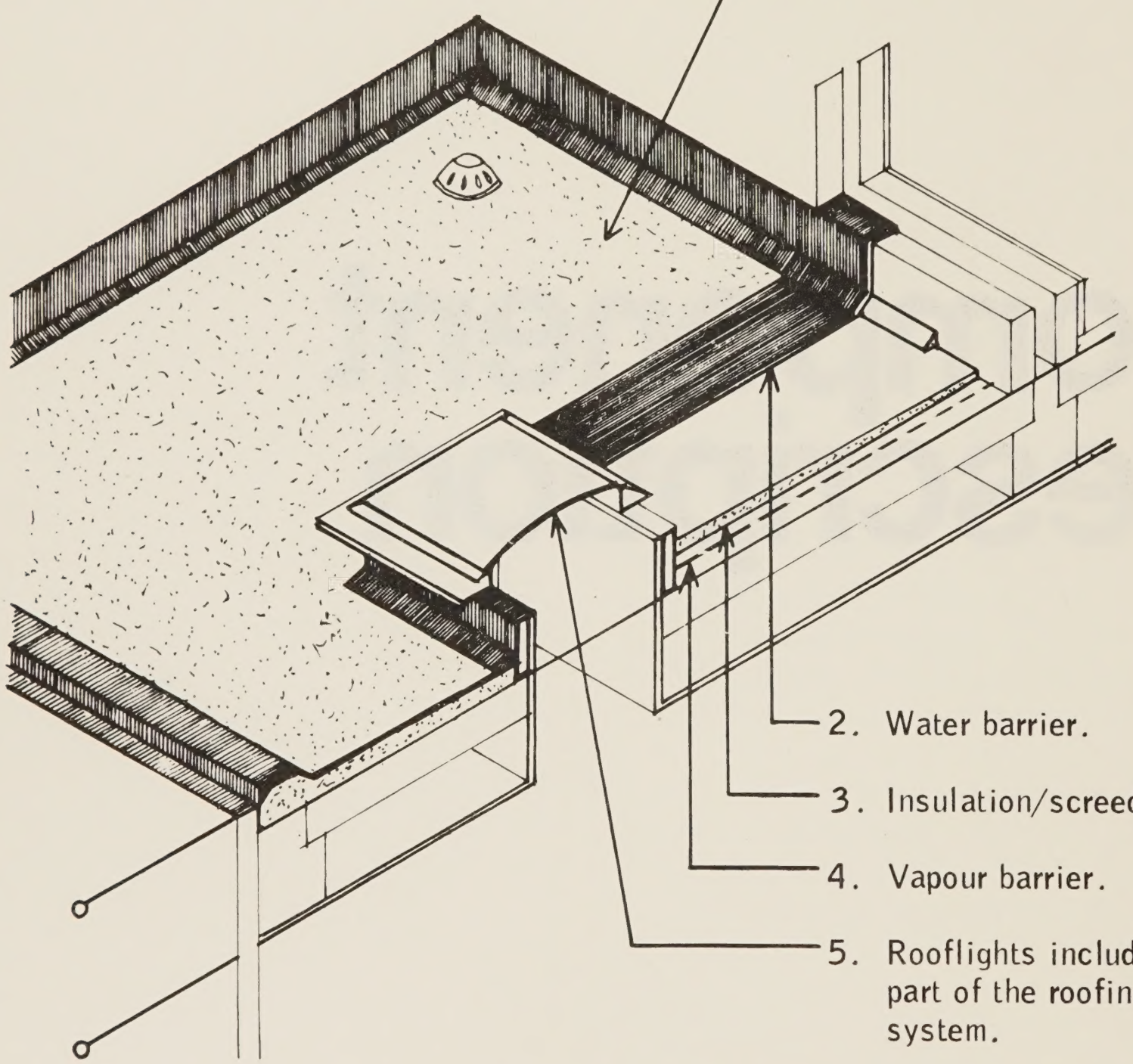

Detailed specifications for items 1 - 5 above may be obtained from the PRODUCT SPECIFICATION of the selected manufacturer.

Roofing system dimensional discipline

7

The roof zone depth is measured from the underside of the finished ceiling to (i) finished roof level or (ii) finished top of parapet.

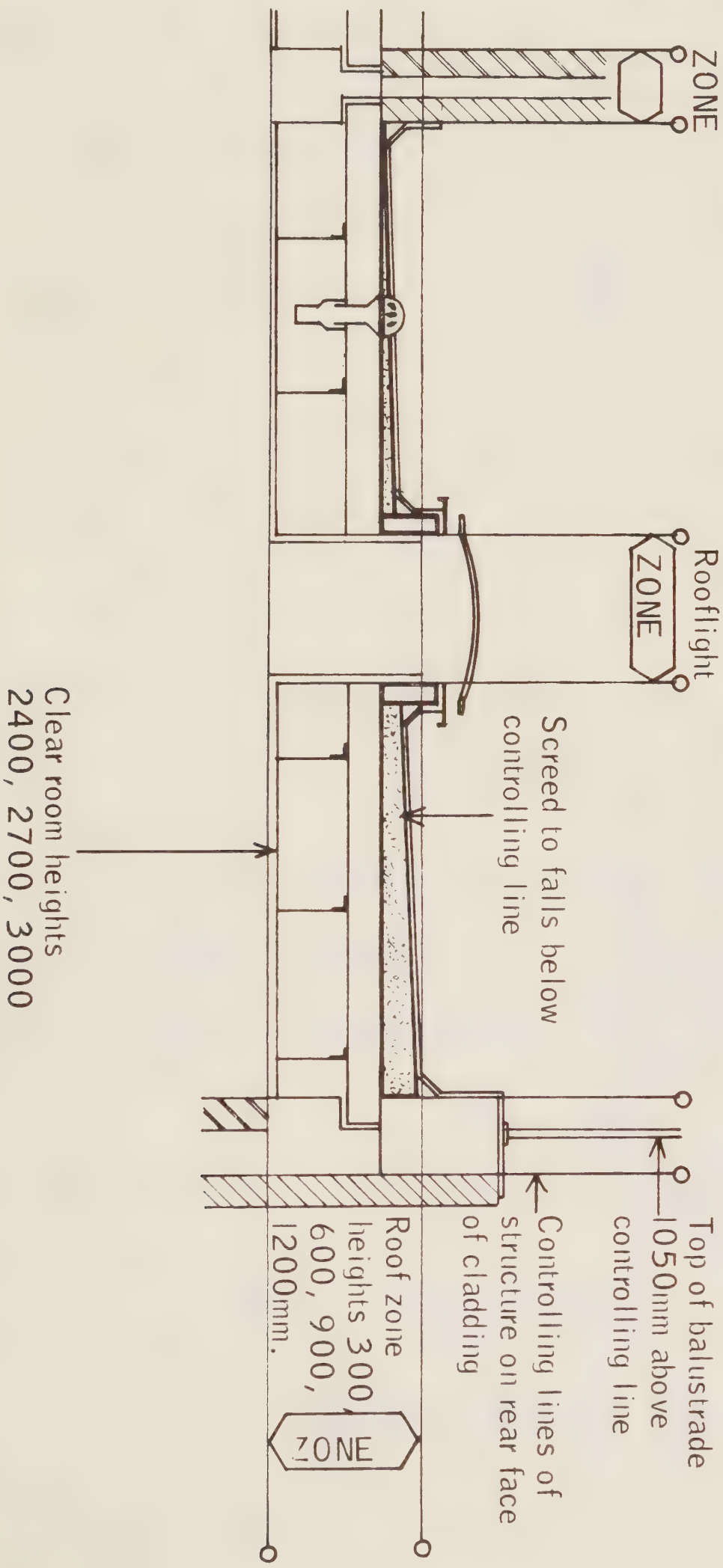

8 Roofing system dimensional discipline

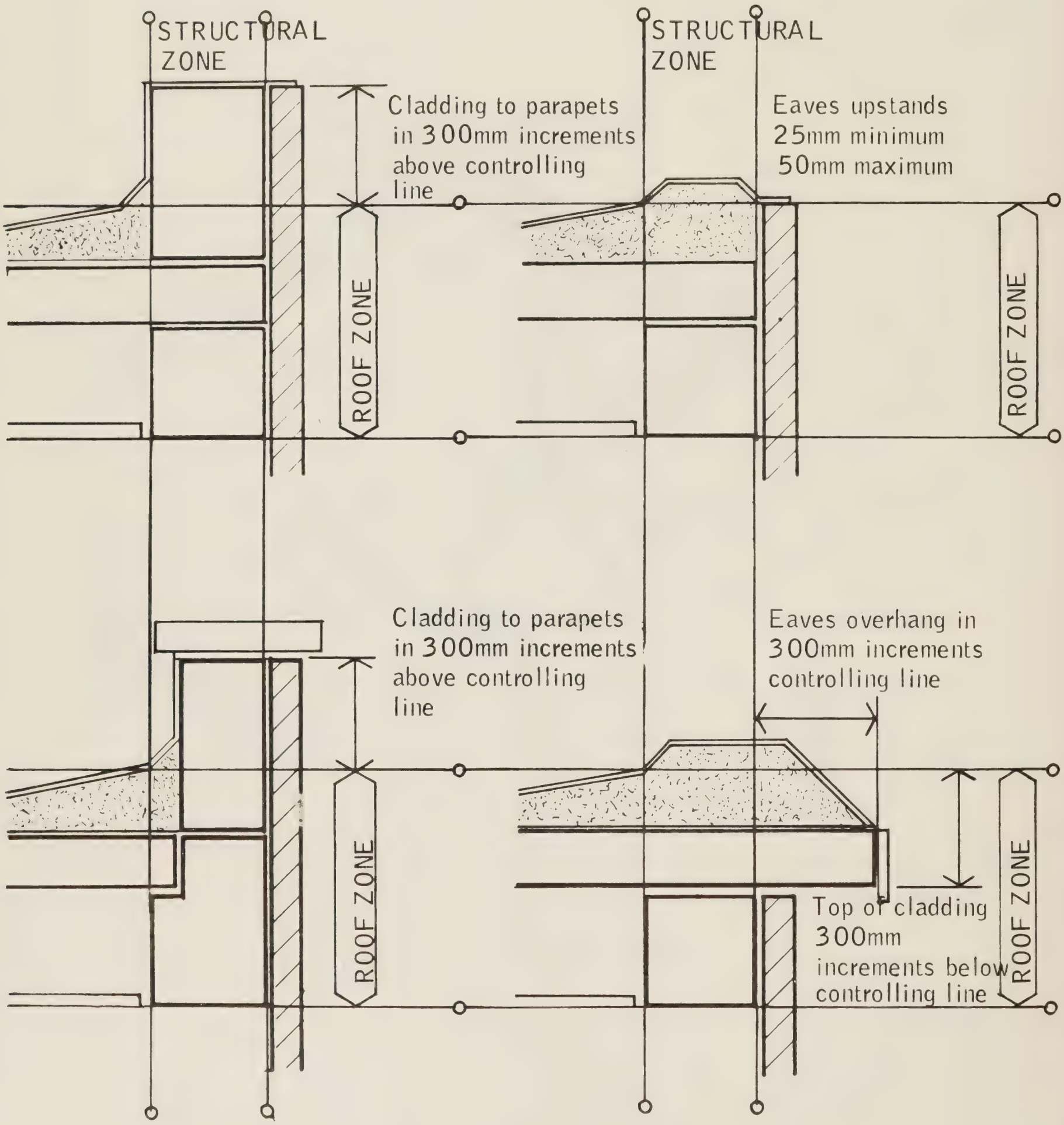

Typical eaves details

Rooflights description

The components are as follows:

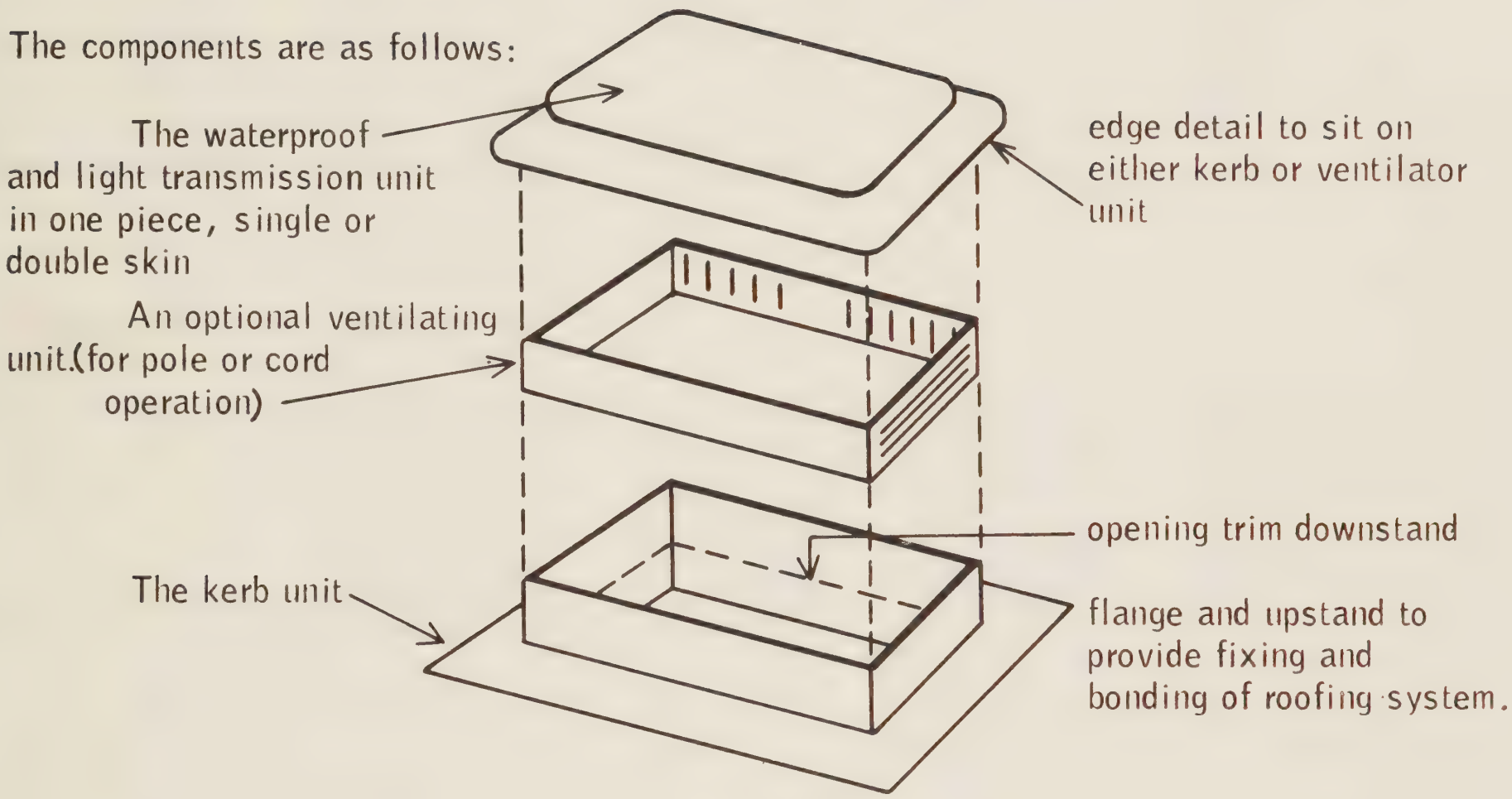

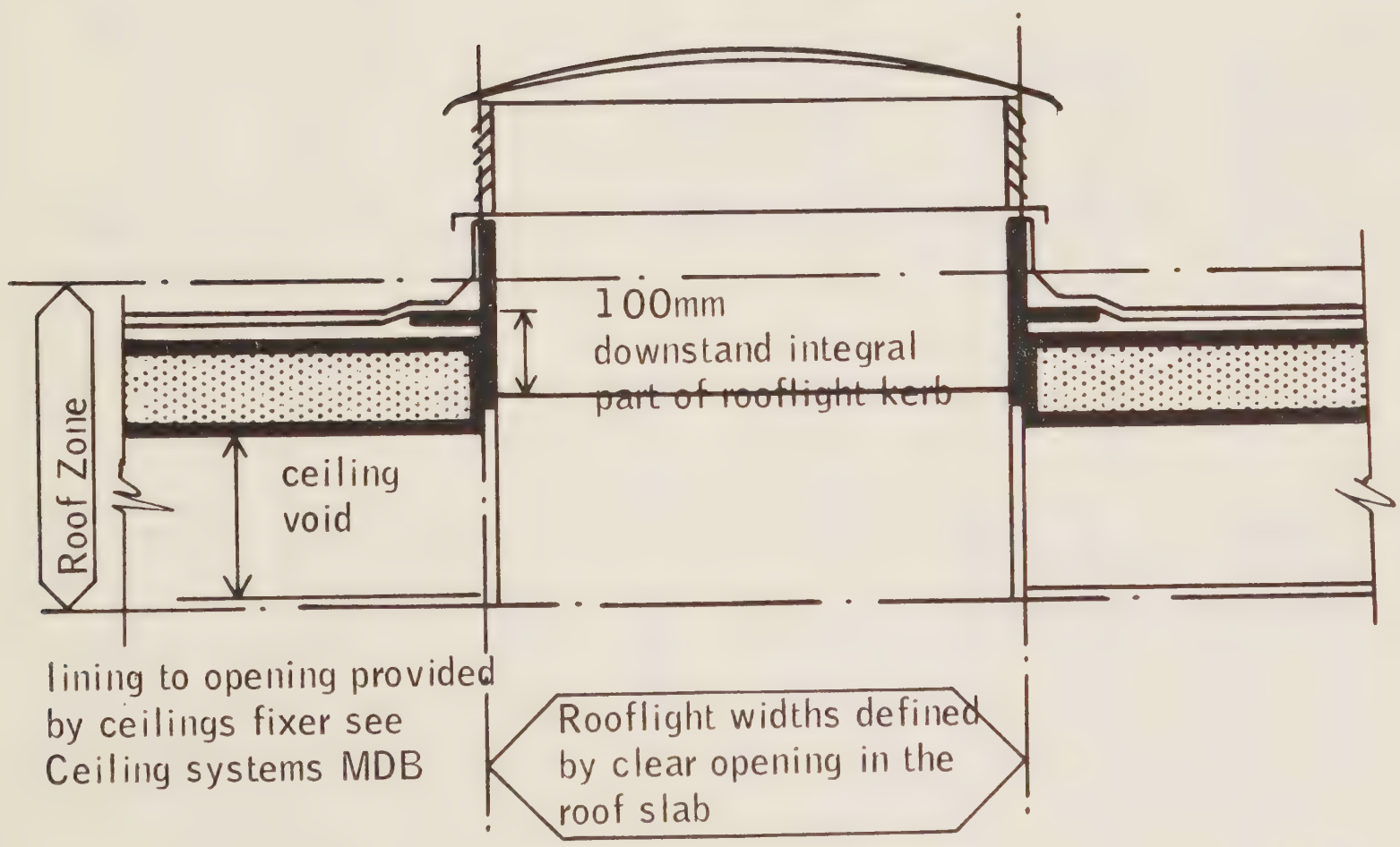

10

Rooflights dimensional discipline

Range of rooflight sizes – measured as clear roof openings

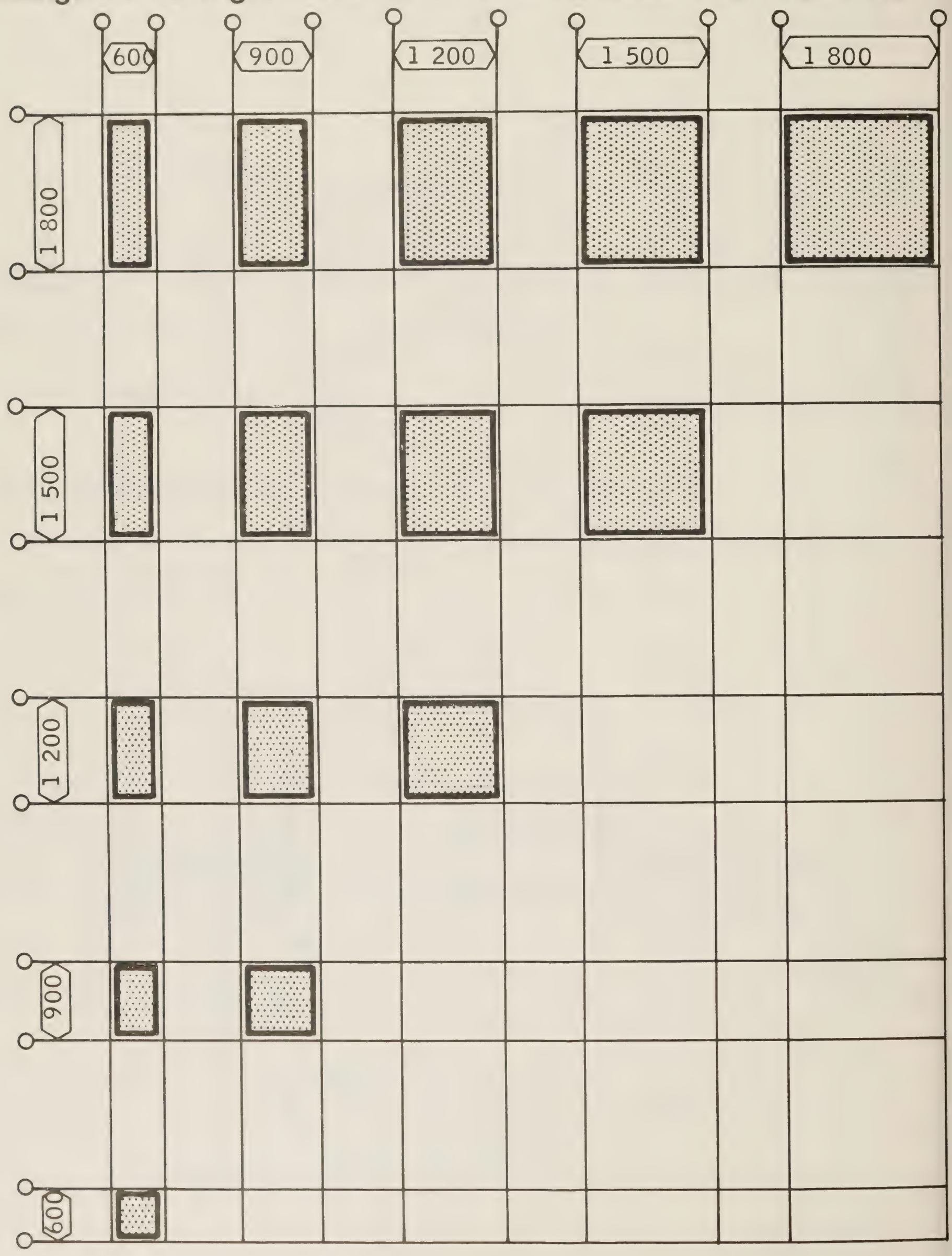

Performance standards

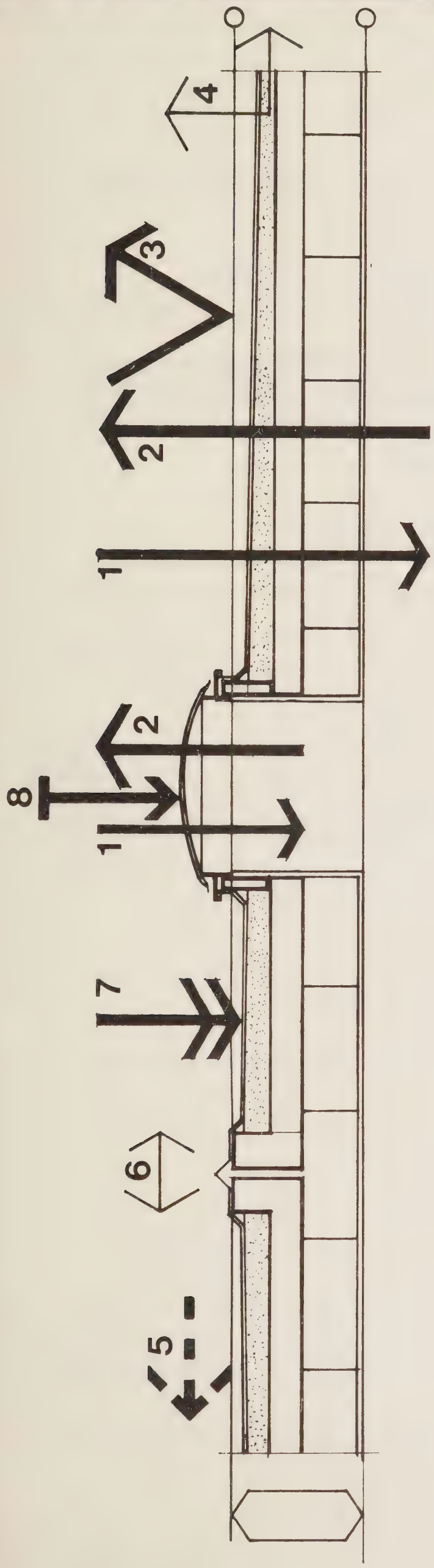

Roofing systems are designed to meet the following minimum performance standards when used with structural assemblies set out in MDB I/I.

* **1** Sound reduction 45 dB minimum.

* **2** Thermal conductance I.0 watts.

3 Light reflectance 42%

4 Top or side venting.

5 Fire resistance and surface spread of flame classification AA

6 Expansion to allow for 2% movement.

7 Resistance to accidental impact equivalent to Ikg. dropped from I metre with an impact surface area of 25mm x 25mm.

8 Rooflights are designed to withstand the weight of a man weighting II5 kg.

* These values apply to double skin unventilated rooflights only.

UPSTANDS : upstands requiring flashings

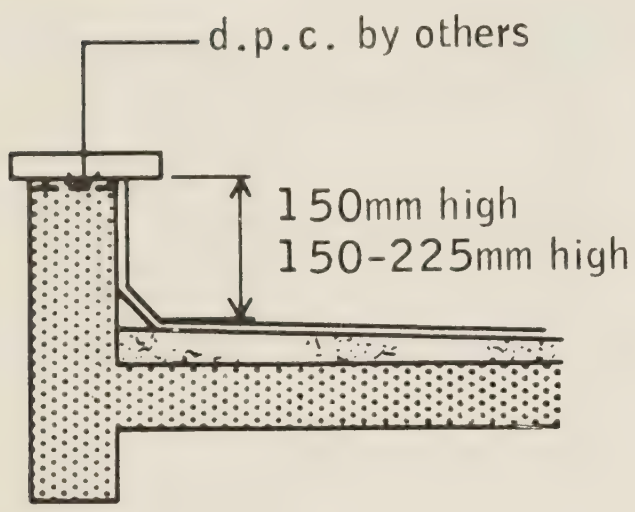

detail 'A'

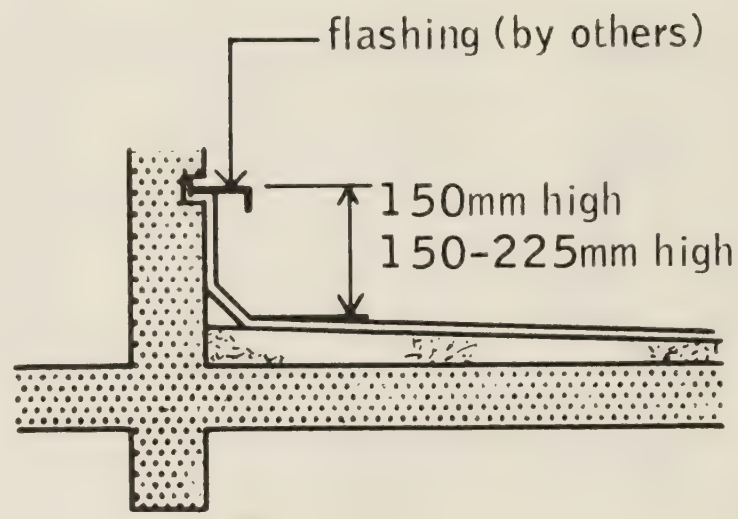

detail 'A'

UPSTAND not requiring flashing

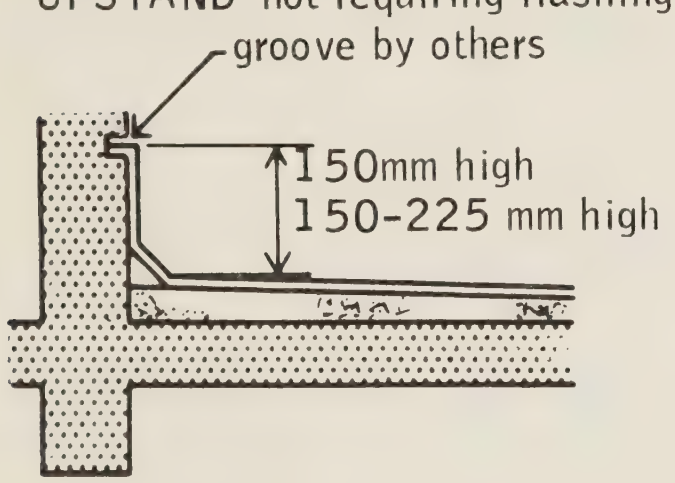

detail 'B'

DUCTS :

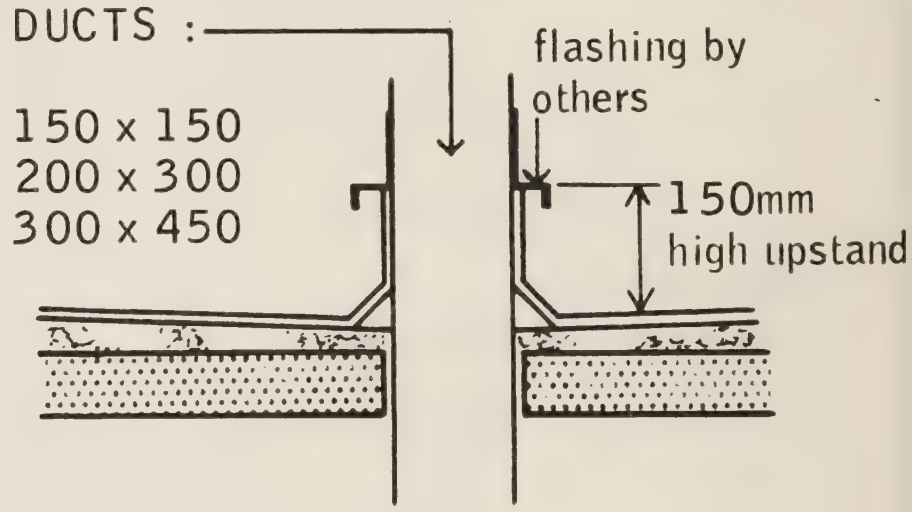

detail 'C'

PIPES

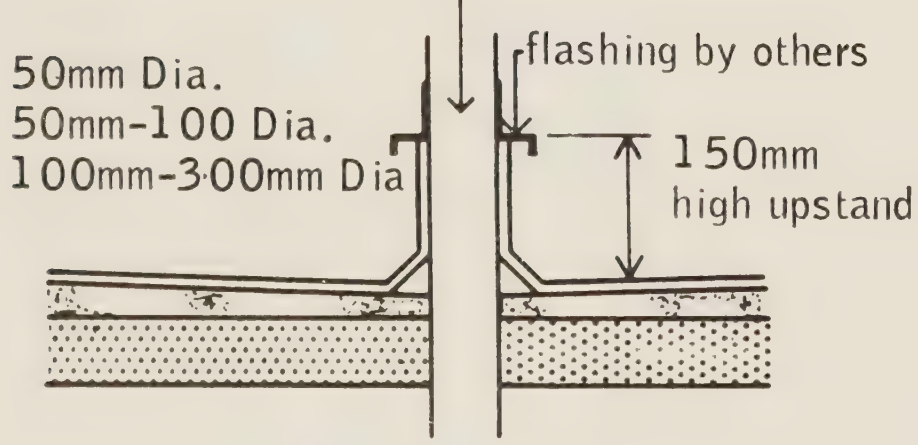

detail 'D'

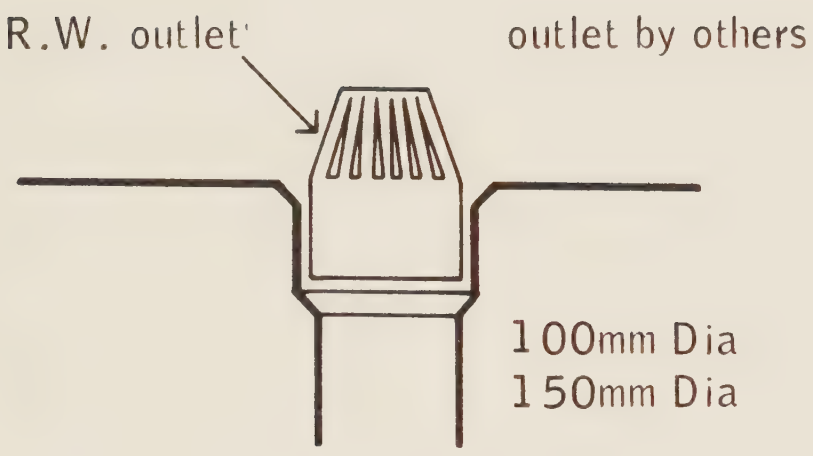

detail 'E'

EDGE TRIMS, EAVES AND VERGES

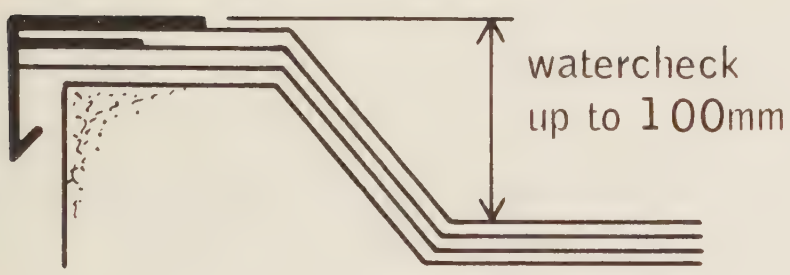

With watercheck

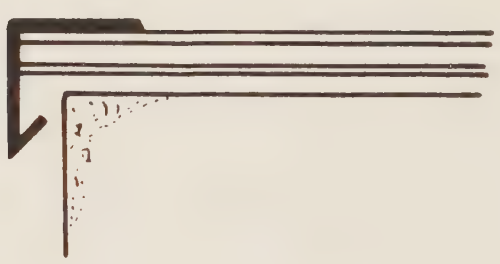

Without watercheck

detail 'F'

EXPANSION JOINTS

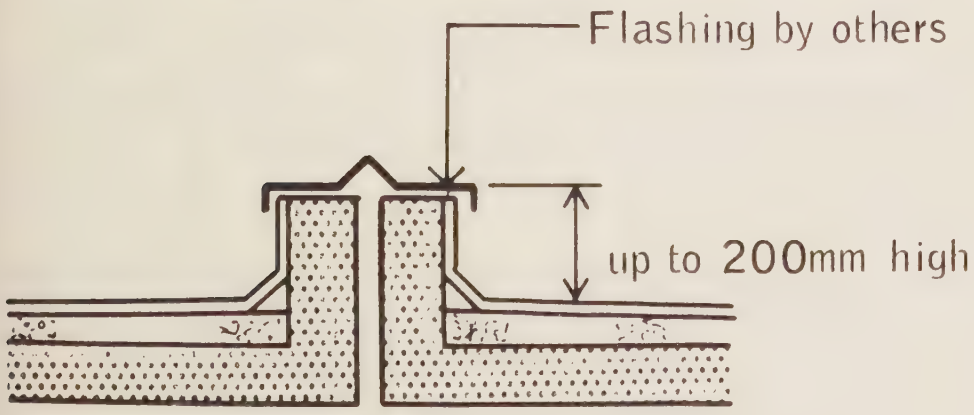

expansion joint in structural roof

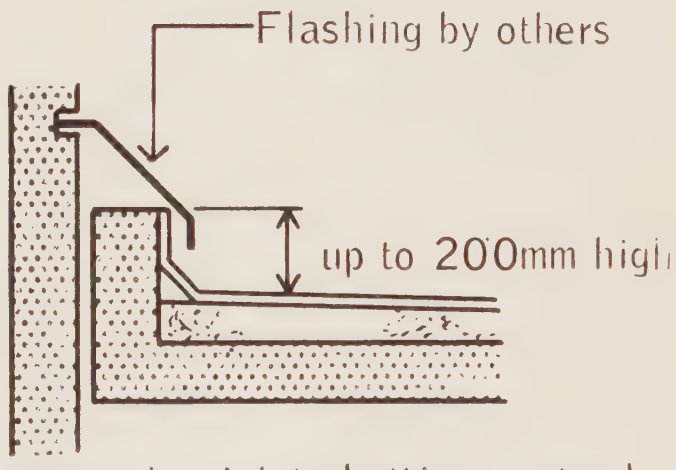

expansion joint abutting upstand

detail 'G'

14

Use

Use selection

item	selection sequence	choice and page no
1	Consider falls, traffic and optimum life.	Asphalt or built up roofing. The choice of asphalt or built up roofing will determine the selection process of labours and details which are classified' on page 20.
2	Consider insulation and falls required.	Select suitable system from Product Specifications.
3	Establish details and heights at abutments and parapets.	Select from details set out in page 8, 12, 13, 20
4	Design eaves details	Select from details set out in page 12, 13, 20
5	Work out down-pipe systems and establish outlet types.	Select from details set out in page 8, 12, 20
6	Locate and select rooflights.	10, 11, 21
7	Locate service holes, ducts, etc. penetrating roofing system	Select from details set out in page 8, 12, 20
8	Locate expansion joint positions	Select from details set out in page 8, 12, 20
9	Locate lightning conductors.	(Consult manufacturers)
10	Locate all miscellaneous fixtures - window cleaning gantries, railings, flag poles, lightning standards, etc.	(Consult manufacturers)
11	Check erection sequence roofing/cladding.	(Consult manufacturers)

Use detail

16

Health Service Design Note No. 5 "Co-ordination of components for Health Buildings and Space Data" gives information about the horizontal and vertical controlling dimensions and the location of components.

This section brings together some of the details in Note No. 5 with the data on roofing systems, including rooflights, in this document.

Design Stage

Identify and classify block location, roof levels and the plan parts on roof plan (layered drawing.)

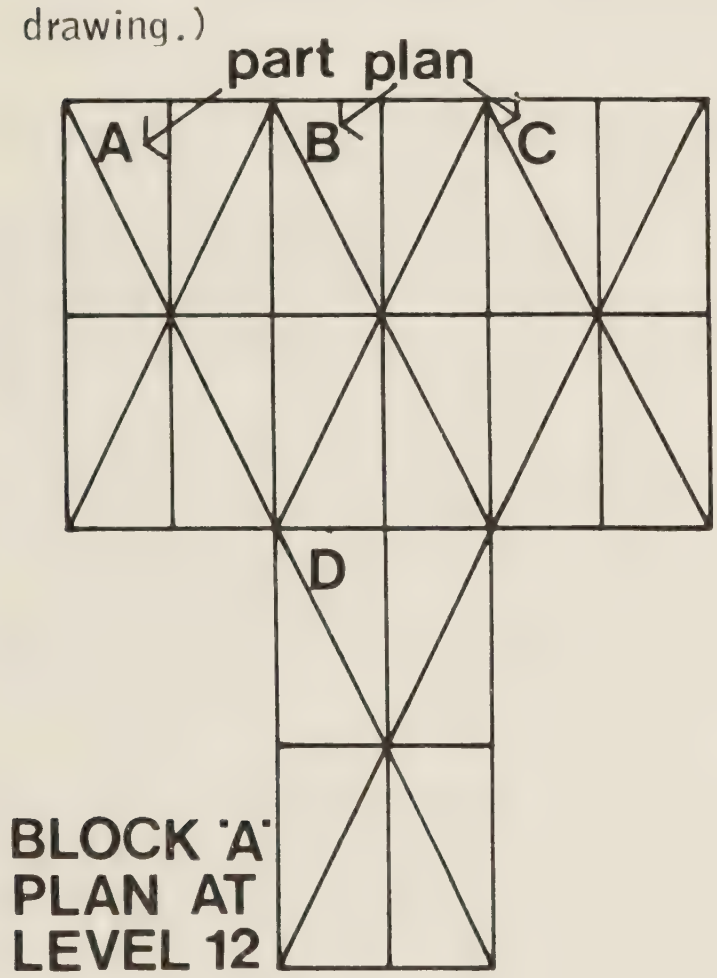

Controlling Dimensions

The main horizontal dimensions of the roof areas and superstructures are already determined by the dimensions (bay sizes) generated by the choice of structural bay and the position of the cladding in relation to the peripheral columns of the structure.

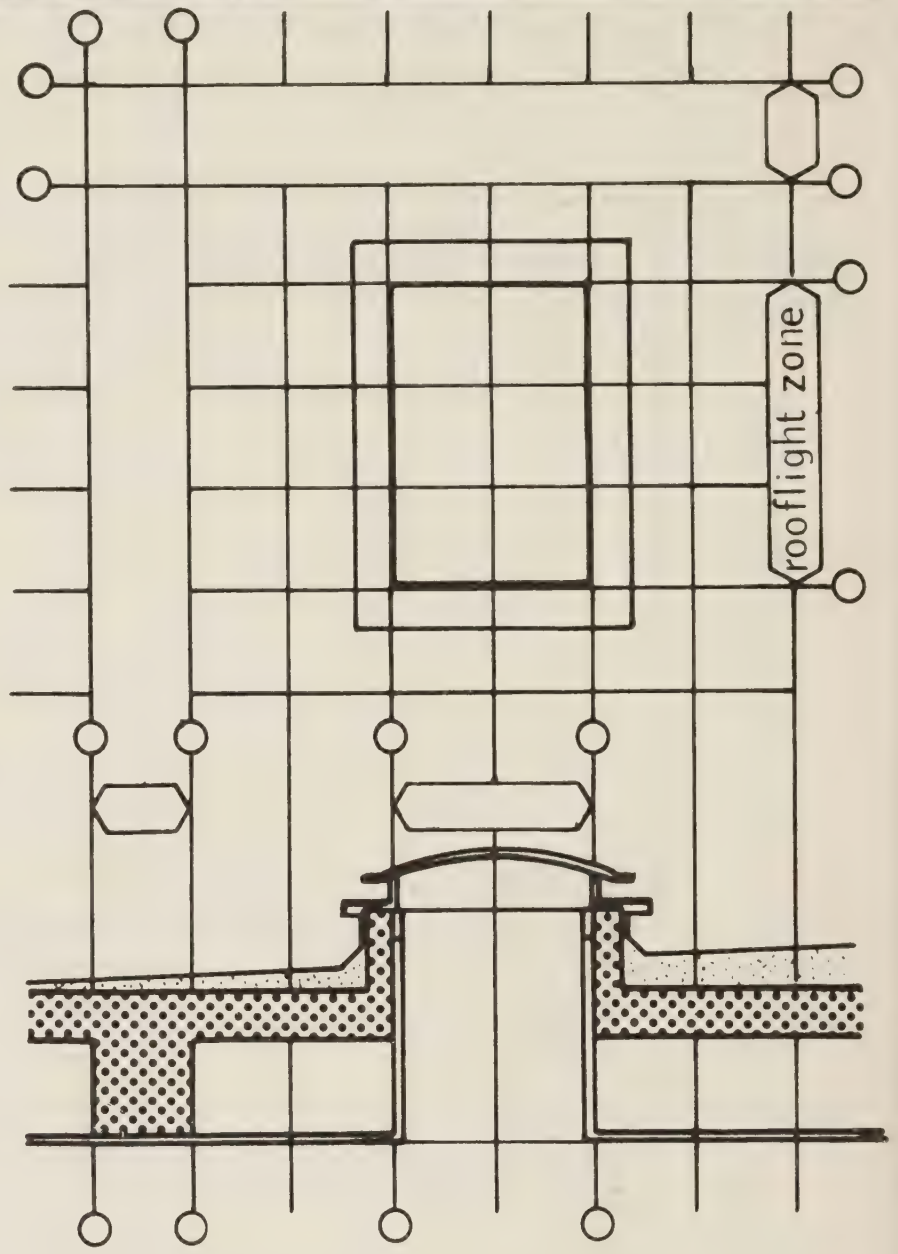

Rooflight and openings should be positioned preferably on the 300mm controlling grid of the floors below and avoiding the structure.

17

Use detail

Design Stage

Mark on design drawings:

(1) Roofing system for each area of roof
(2) Rooflights
(3) Labours and details of drainage
(4) Kerb, verge, ventilation details

It is recommended that at the end of the Design Stage information is written on in full.

Production Documentation

This figure shows that the full information on sketch plan has been put into coded data for processing by the Quantity Surveyor and the manufacturer.

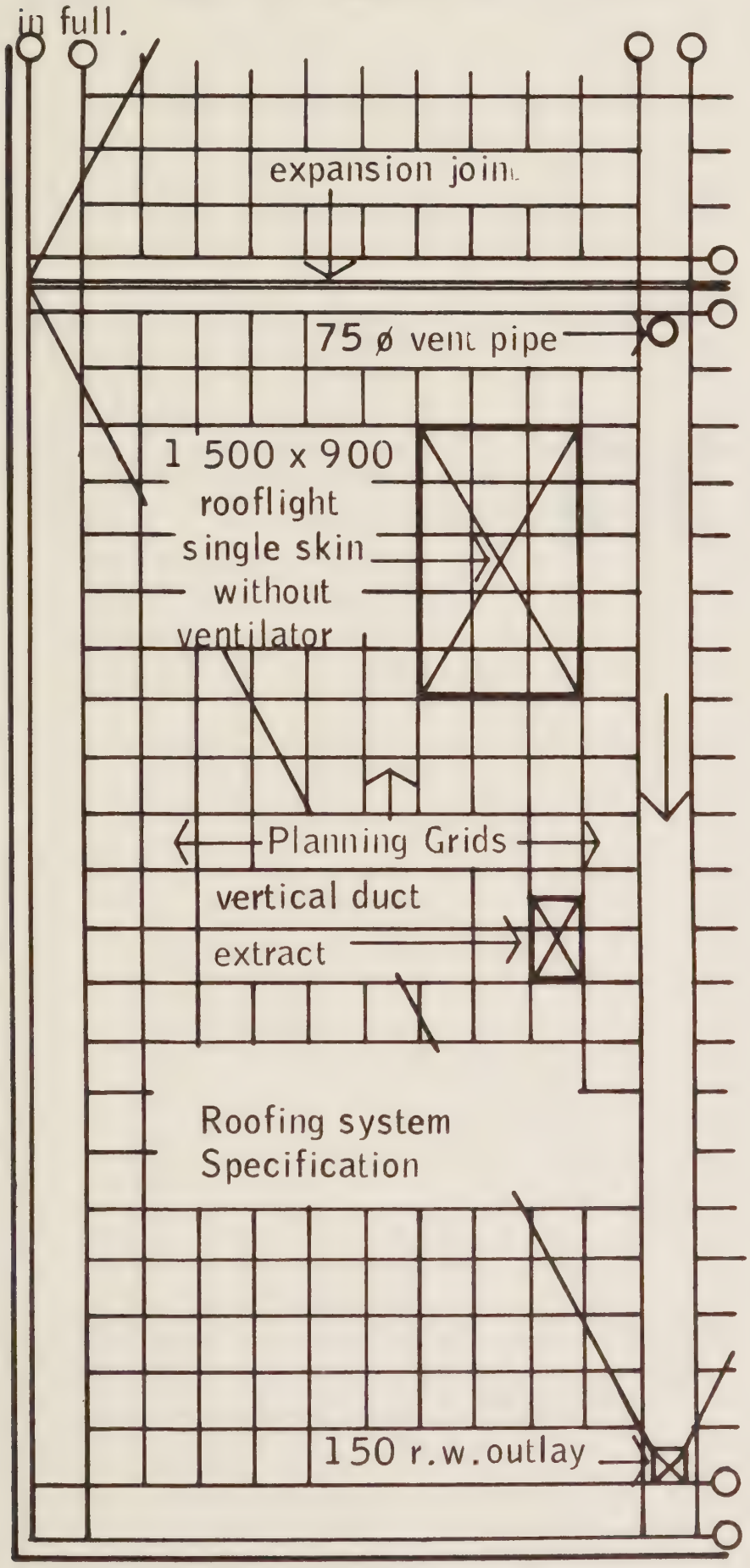

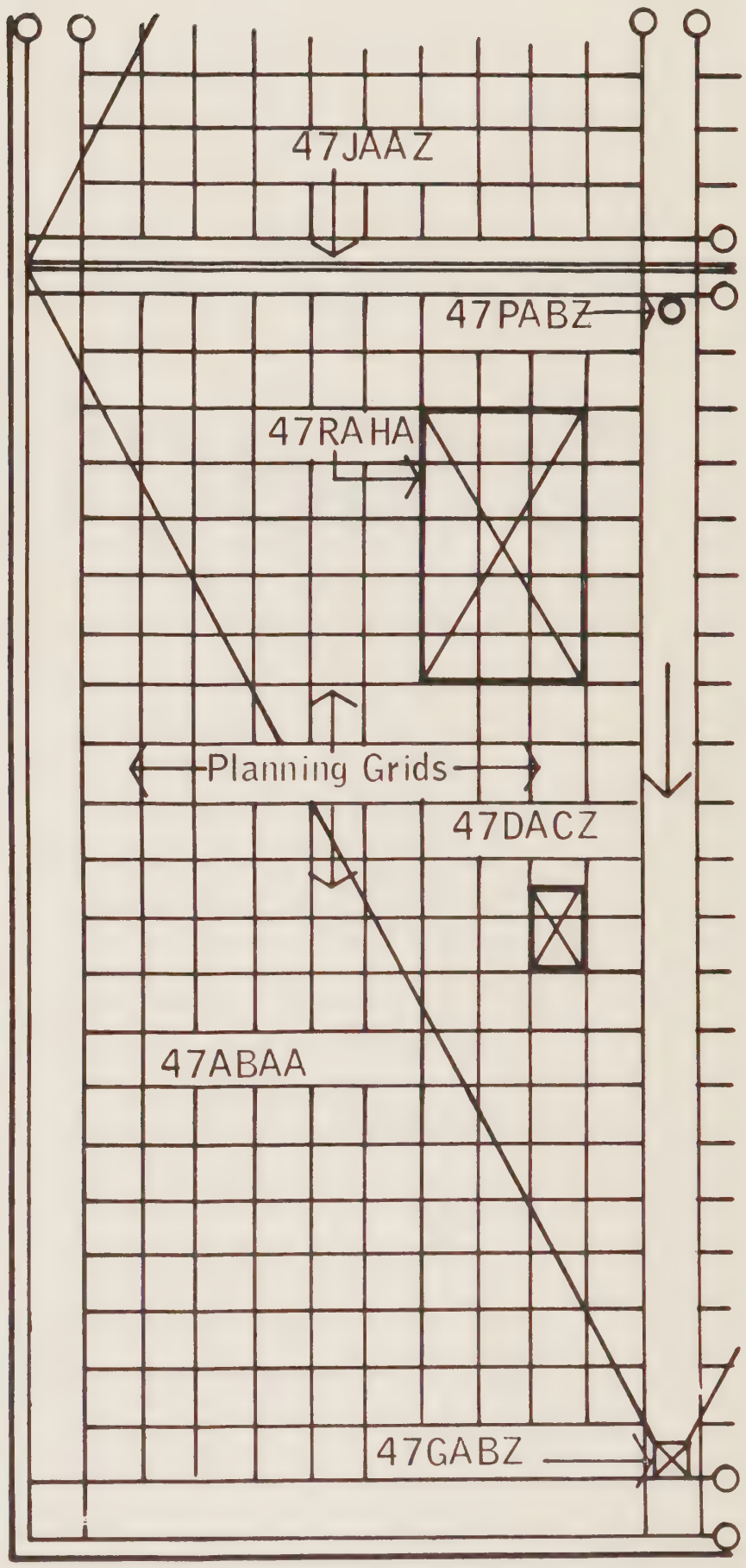

18

Selection

Each of the four letters has a different meaning by sequence in the series as follows:

This table is shown for information purposes only.

No attempt should be made to extend the range of coded items.

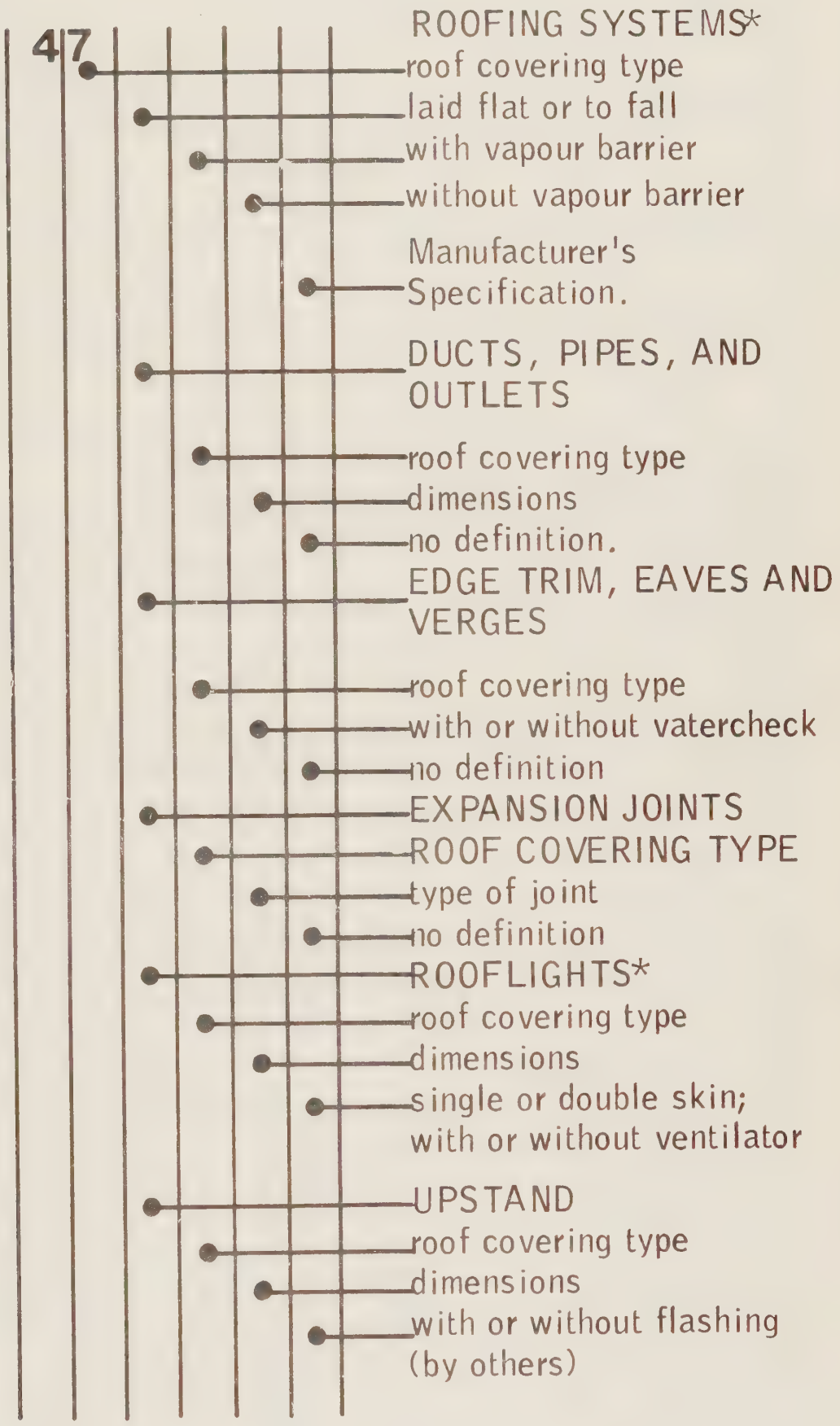

Coding conventions

The coding for roofing systems is based on a six-facet alphanumeric code. Two figures are followed by four letters e.g. 47ABAA. The figures are CI/SfB numbers.*

* For purpose of classification, and computation the numerical interface for rooflight openings in external envelope (CI/SfB 37) has been made the same as that for roof coverings (CI/SfB 47)

Range; roofcovering types & other labours

Type	method of laying	vapour barrier	CODES
Asphalt	laid to fall	with	47ABAA
		without	47ABBA
Built up roofing	laid flat	with	47BAAA
		without	47BABA
	laid to fall	with	47BBAA
		without	47BBBA

Details and labours		CODES	
		Roof covering type	
Description	Dimensions		
Upstand to Brick concrete, etc. required flashing (by others)	150 high	47UAAA	47UBAA
	150-225 high	47UABA	47UBBA
	(Detail 'A') 225-300 high	47UACA	47UBCA
Upstand metal with lathing fixed to timber etc. required flashing (by others)	150 high	47UAAC	-
	150-225 high	47UABC	-
	(Detail 'A') 225-300 high	47UACC	-
Upstand to Brick, concrete , etc. requiring no flashing	150 high	47UAAB	47UBAB
	(Detail 'B') 150-225 high	47UABB	47UBBB
	225-300 high	47UACB	47UBCB
150 high upstand to Ducts and similar penetration	150 x 150	47DAAZ	47DBAZ
	(Detail 'C') 200 x 300	47DABZ	47DBBZ
	300 x 450	47DACZ	47DBCZ
150 high upstand to Pipes and similar penetration	55 Dia.	47PAAZ	47PBAZ
	(Detail 'D') 55-110 Dia.	47PABZ	47PBBZ
	over 110 Dia.	47PACZ	47PBCZ
Outlets (Detail E)	100 Dia.	47GAAZ	47GBAZ
	150 Dia.	47GABZ	47GBBZ
Edge trims, eaves and verges (Detail'F')	with 100 (max) water-check	47EAAZ	47EBAZ
	without watercheck	47EABZ	47EBBZ
Expansion joints up to 200 high (Detail 'G')	(i) in structure roof	47JAAZ	47JBAZ
	(ii) abutting upstand	47JABZ	47JBBZ
Pressure relief vent		47VAZZ	-

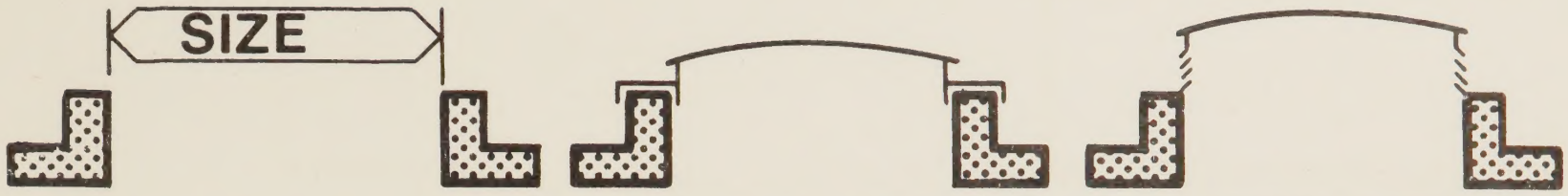

Rooflight Size	Roofing	Unventilated		Ventilated	
		Single Skin	Double Skin	Single Skin	Double Skin
600 x 600	Asphalt	47RAAA	47RAAB	47RAAC	47RAAD
	B U R	47RBAA	47RBAB	47RBAC	47RBAD
600 x 900	Asphalt	47RABA	47RABB	47RABC	47RABD
	B U R	47RBBA	47RBBB	47RBBC	47RBBD
600 x 1200	Asphalt	47RACA	47RACB	47RACC	47RACD
	B U R	47RBCA	47RBCB	47RBCC	47RBCD
600 x 1500	Asphalt	47RADA	47RADB	47RADC	47RADD
	B U R	47RBDA	47RBDB	47RBDC	47RBDD
600 x 1800	Asphalt	47RAEA	47RAEB	47RAEC	47RAED
	B U R	47RBEA	47RBEB	47RBEC	47RBED
900 x 900	Asphalt	47RAFA	47RAFB	47RAFC	47RAFD
	B U R	47RBFA	47RBFB	47RBFC	47RBFD
900 x 1200	Asphalt	47RAGA	47RAGB	47RAGC	47RAGD
	B U R	47RBGA	47RBGB	47RBGC	47RBGD
900 x 1500	Asphalt	47RAHA	47RAHB	47RAHC	47RAHD
	B U R	47RBHA	47RBHB	47RBHC	47RBHD
900 x 1800	Asphalt	47RAJA	47RAJB	47RAJC	47RAJD
	B U R	47RBJA	47RBJB	47RBJC	47RBJD
1200 x1200	Asphalt	47RAKA	47RAKB	47RAKC	47RAKD
	B U R	47RBKA	47RBKB	47RBKC	47RBKD
1200 x1500	Asphalt	47RALA	47RALB	47RALC	47RALD
	B U R	47RBLA	47RBLB	47RBLC	47RBLD
1200 x1800	Asphalt	47RAMA	47RAMB	47RAMC	47RAMD
	B U R	47RBMA	47RBMB	47RBMC	47RBMD
1500 x1500	Asphalt	47RANA	47RANB	47RANC	47RAND
	B U R	47RBNA	47RBNB	47RBNC	47RBND
1500 x1800	Asphalt	47RAPA	47RAPB	47RAPC	47RAPD
	B U R	47RBPA	47RBPB	47RBPC	47RBPD
1800 x1800	Asphalt	47RAQA	47RAQB	47RAQC	47RAQD
	B U R	47RBQA	47RBQB	47RBQC	47RBQD

R 13082/12822 2500 11/72 P

2|1

MDB reference

0	Use and Index Service document	Use and Index Service document	0/1 0/2
1	Structure	Structure (reprint)	1/1
2	External envelope	Roofing systems Cladding (later) Windows and composite infill panels	2/1 2/2 2/3
3	Internal sub-division	Partitions Door sets Ceiling system Flooring system Cubicles	3/1 3/2 3/3 3/4 3/5
4	Services and Drainage	Sanitary assemblies Sanitary assembly panels	4/1 4/2
5	Fixtures, furniture and equipment	Storage and worktop units Signposting Curtain tracks	5/1 5/2 5/3

Roofing systems